PARTS LIST

Manufactured by VegaForceCompany, Made in Taiwan.

http:// www.vegaforce.com

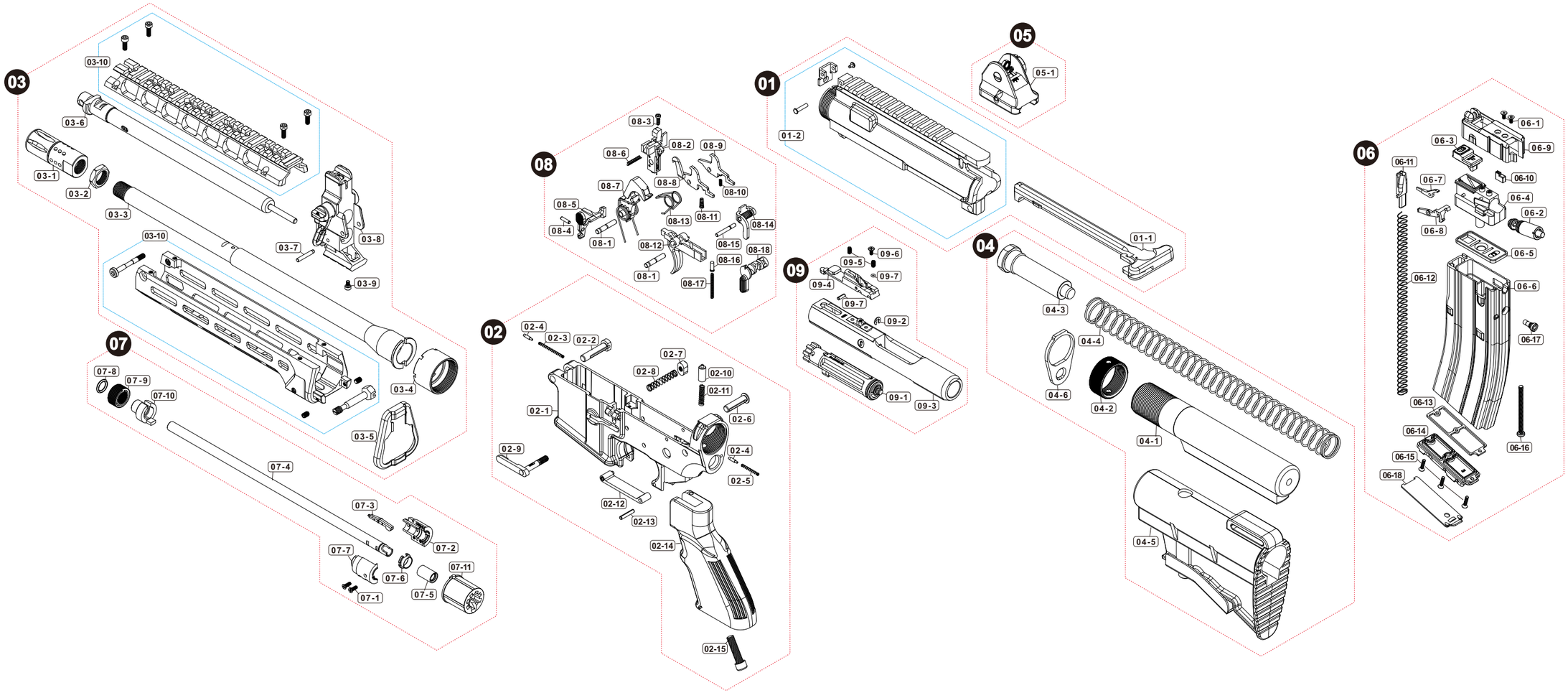

T91 SOC

VR SERIES GAS BLOWBACK RIFLE

2024.01.31