PERFECTION

2.6457-UXA G17 GEN5 Airsoft GAS Pistol

BLOW BACK | METAL SLIDE | SPIN UP ADJUSTABLE

PARTS LIST

● SLIDE

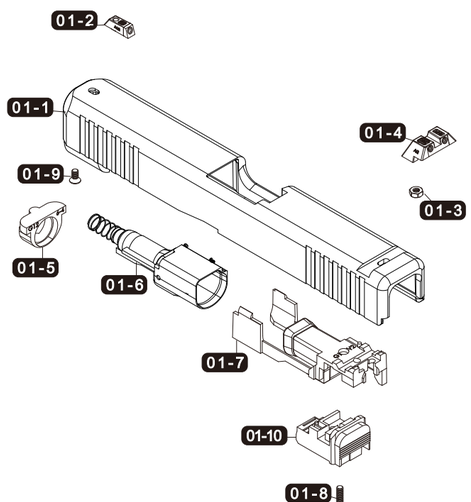

● BARREL

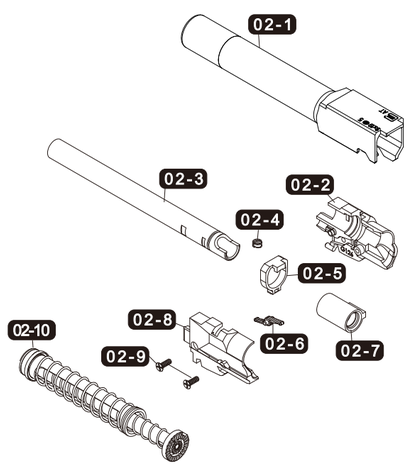

● GRIP

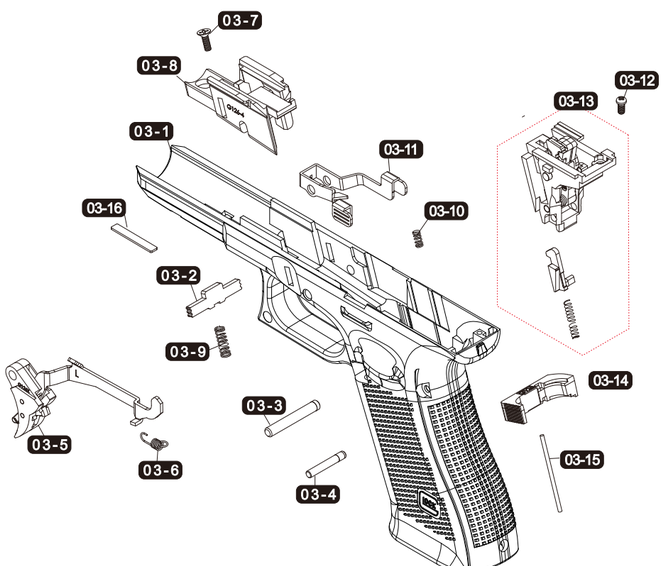

● GAS MAGAZINE

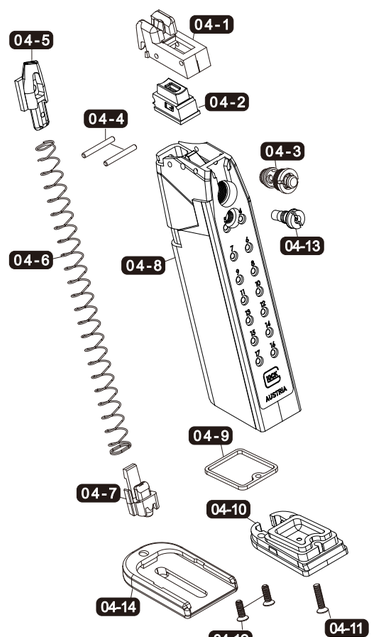

For Sale in Asia Only 2026.11.19