PERFECTION

2.6419X-UXA
G18C II
Airsoft GAS Pistol

BLOW BACK | METAL SLIDE | SPIN UP ADJUSTABLE

PARTS LIST

● SLIDE

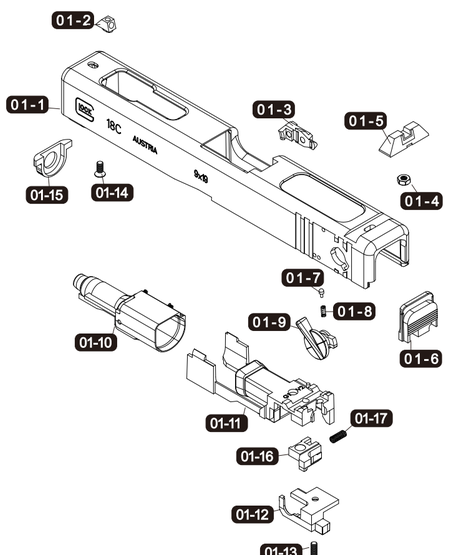

● BARREL

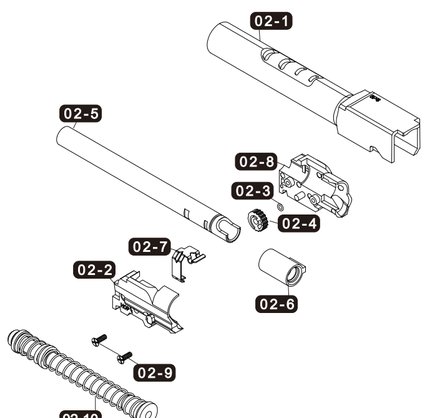

● GRIP

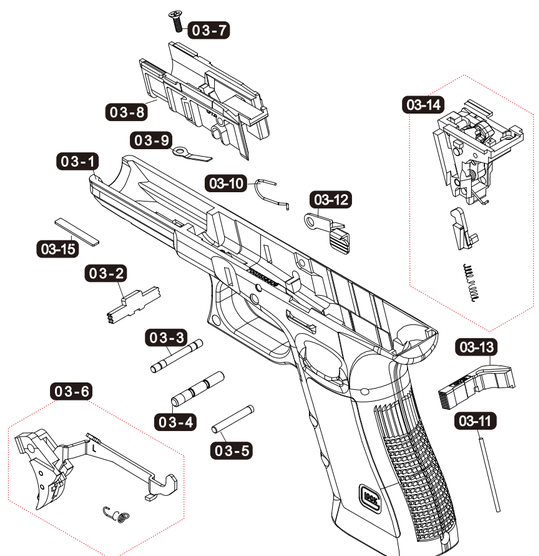

● MAGAZINE

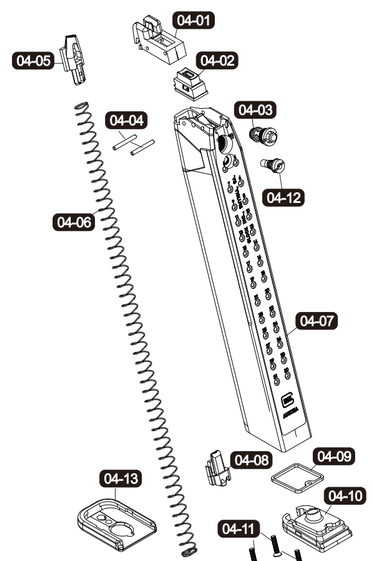

For Sale in Asia Only 2026.11.16