PERFECTION

2.6413-UXA
G19 GEN3
Airsoft GAS Pistol

BLOW BACK | METAL SLIDE | SPIN UP ADJUSTABLE

PARTS LIST

● SLIDE

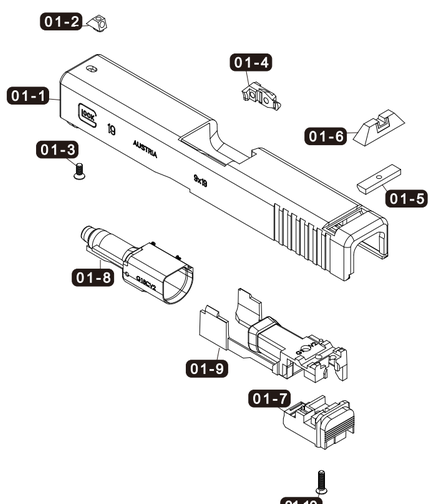

● BARREL

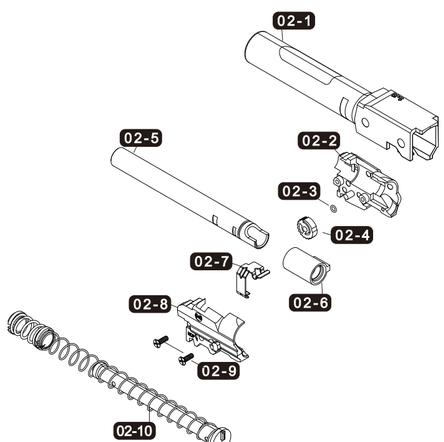

● GRIP

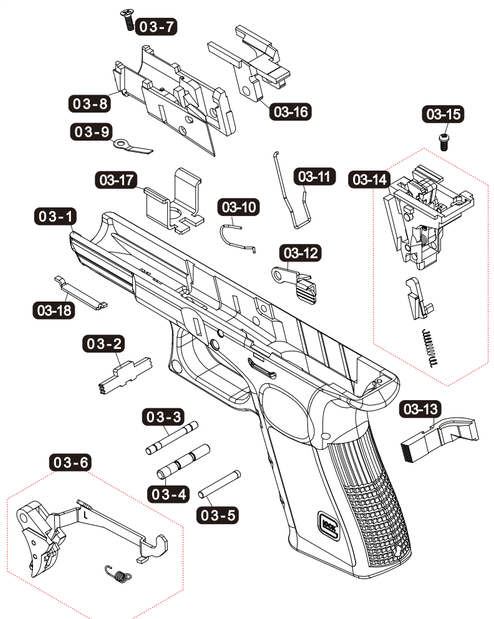

● MAGAZINE

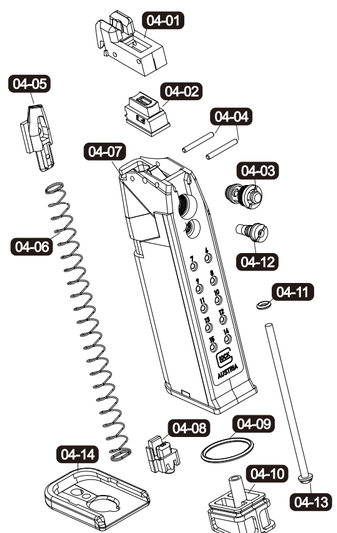

For Sale in Asia Only 2026.11.17